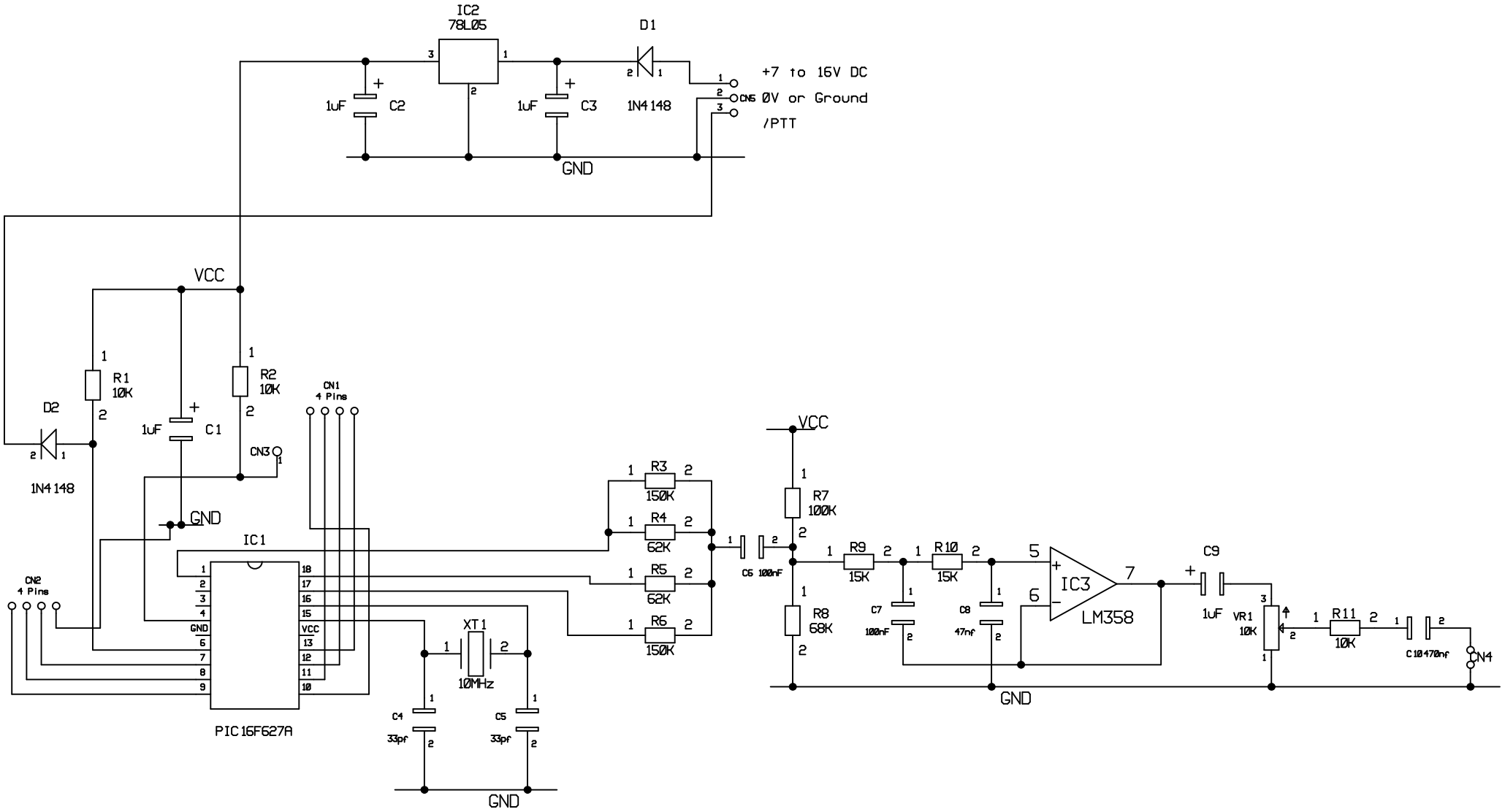

CTCSS Tone Encoder Issue A