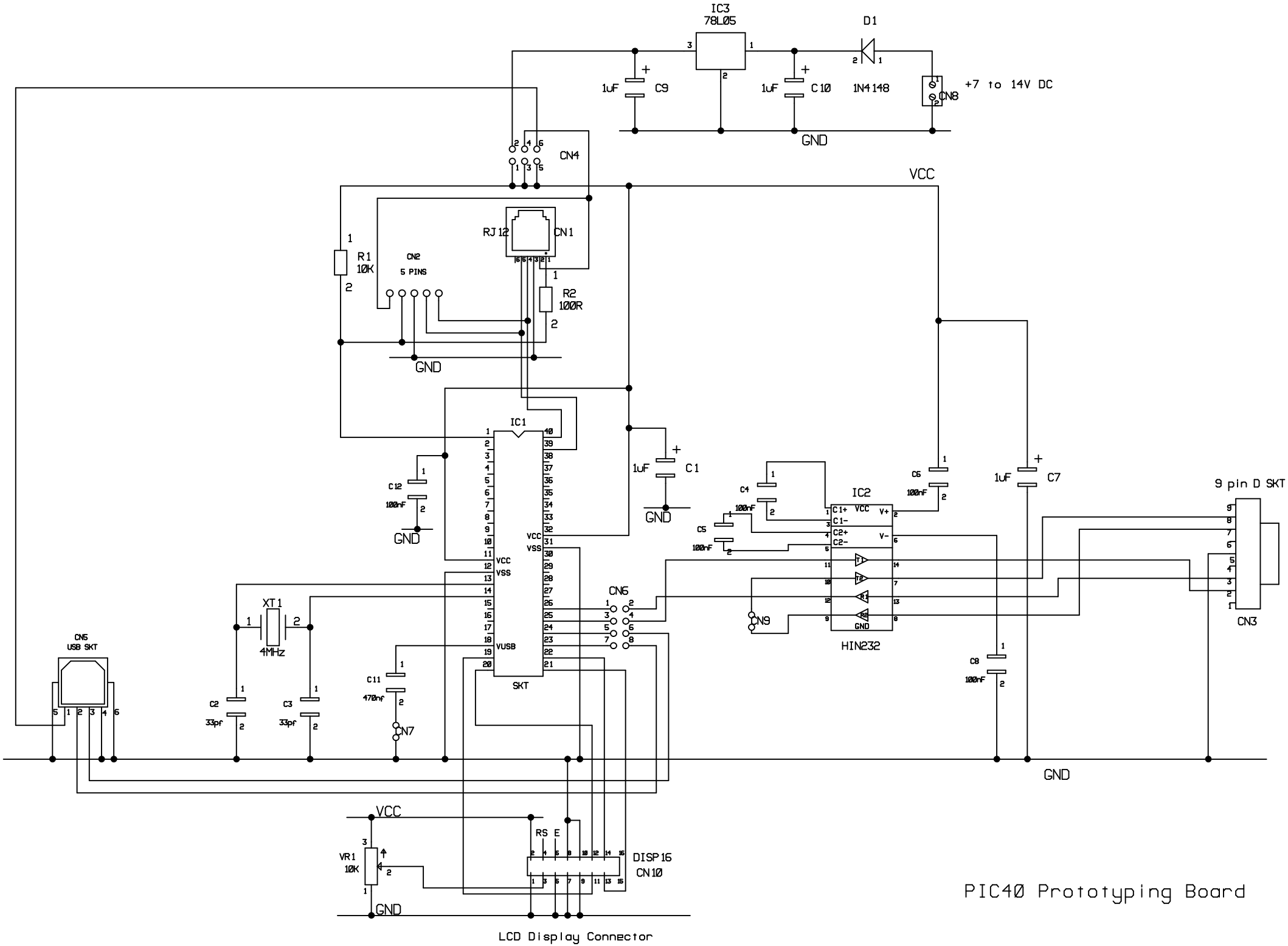
IC3
78L05
D1
1uF
C9
1uF
C10
1N4148
CN8
+7 to 14V DC
GND
CN4
VCC
RJ12
CN1
R1
10K
CN2
5 PINS
R2
100R
GND
IC1
C12
100nF
GND
1uF
C1
GND
C4
100nF
C5
100nF
IC2
C1+
C1-
C2+
C2-
VCC
V+
V-
T1
T2
R1
R2
GND
HIN232
C6
100nF
1uF
C7
9 pin D SKT
CN3
CN9
CN6
XT1
4MHz
CN5
USB SKT
C2
33pf
C3
33pf
C11
470nf
CN7
VUSB
SKT
C8
100nF
GND
VCC
VR1
10K
GND
RS E
DISP16
CN10
LCD Display Connector
PIC40 Prototyping Board