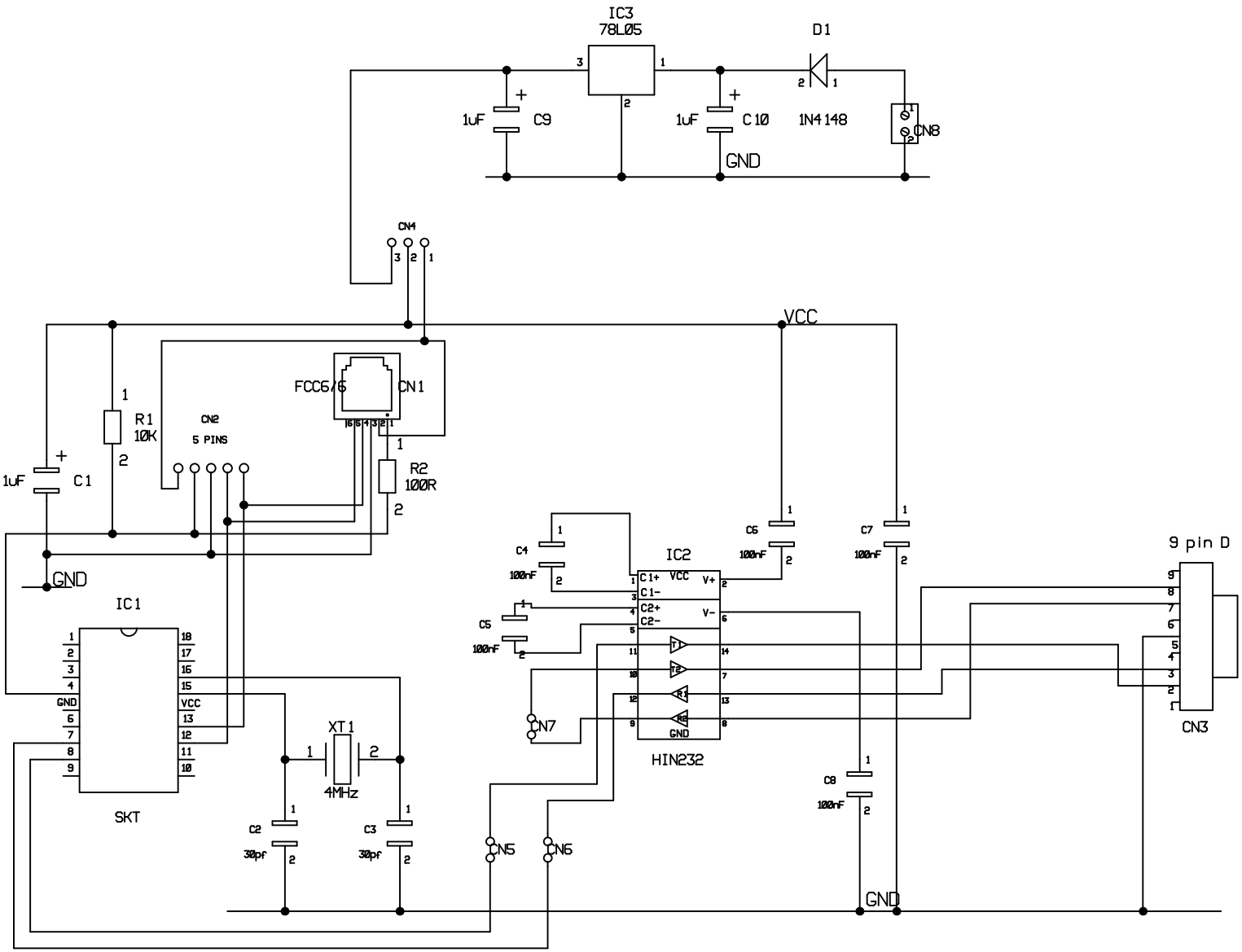
IC3
78L05
D1
1uF
C9
1uF
C10
1N4148
CN8
GND
CN4
VCC
FCC6/6
CN1
R1
10K
CN2
5 PINS
1uF
C1
R2
100R
GND
IC1
GND
VCC
SKT
XT1
4MHz
C2
30pf
C3
30pf
CN5
CN6
C4
100nF
C5
100nF
IC2
C1+
C1-
C2+
C2-
VCC
V+
V-
T1
T2
R1
R2
GND
HIN232
CN7
C6
100nF
C7
100nF
C8
100nF
GND
9 pin D
CN3

PIC18 Iss A