R1 & R3 set op-amp input gain
C2, R2, R4 & R5 are for balanced input
R6 = mic power feed option

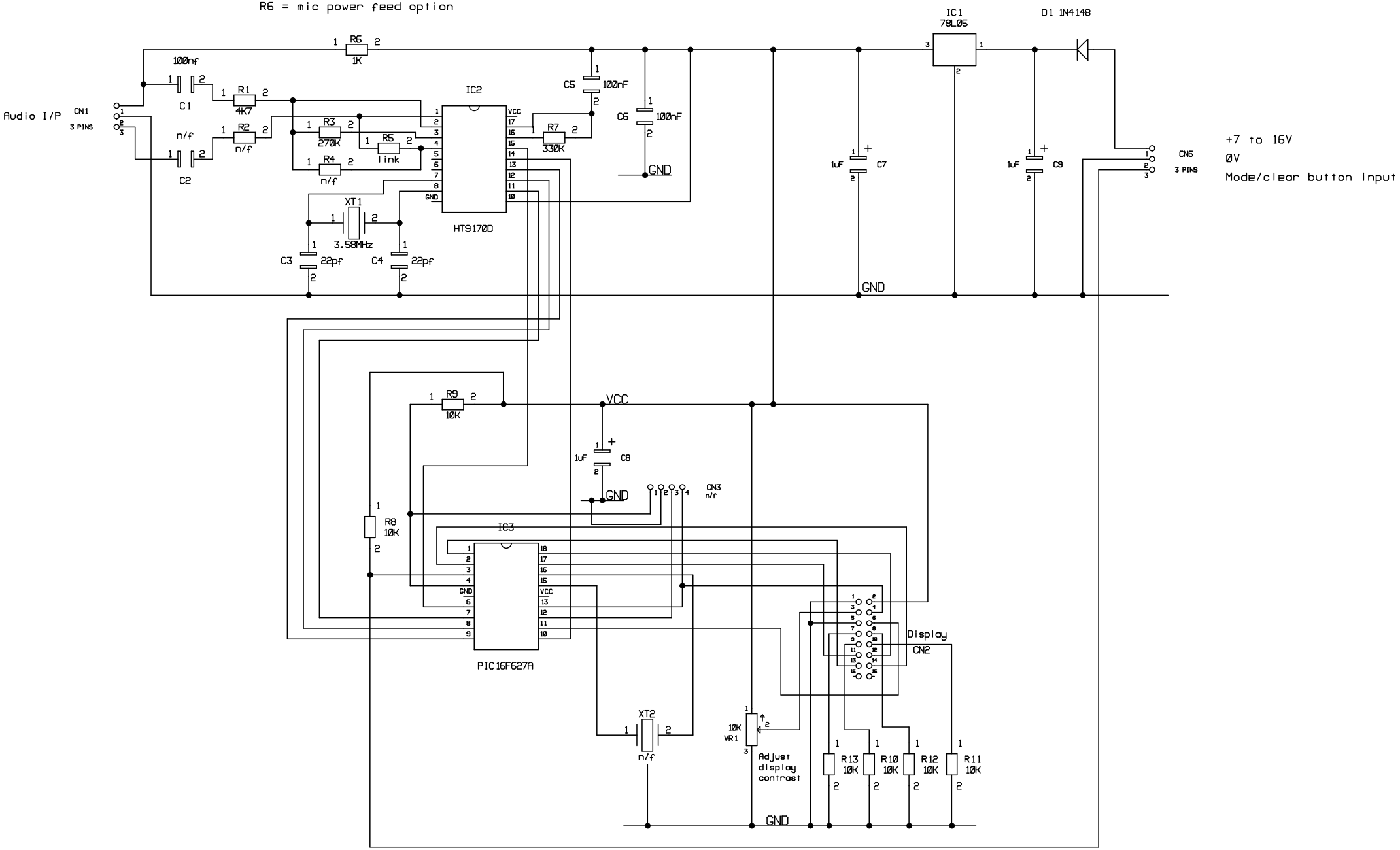


DTMF Display Circuit